TOP BRASS LIGHTING | NUMERA LIGHTING

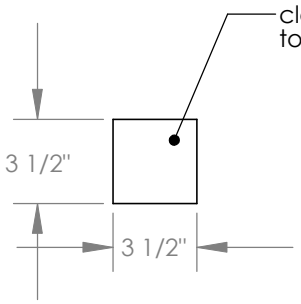

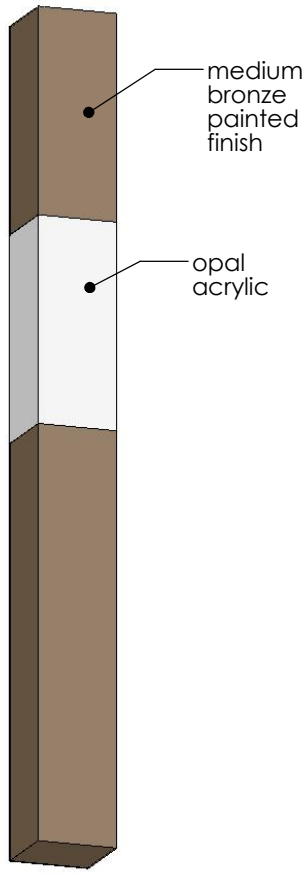

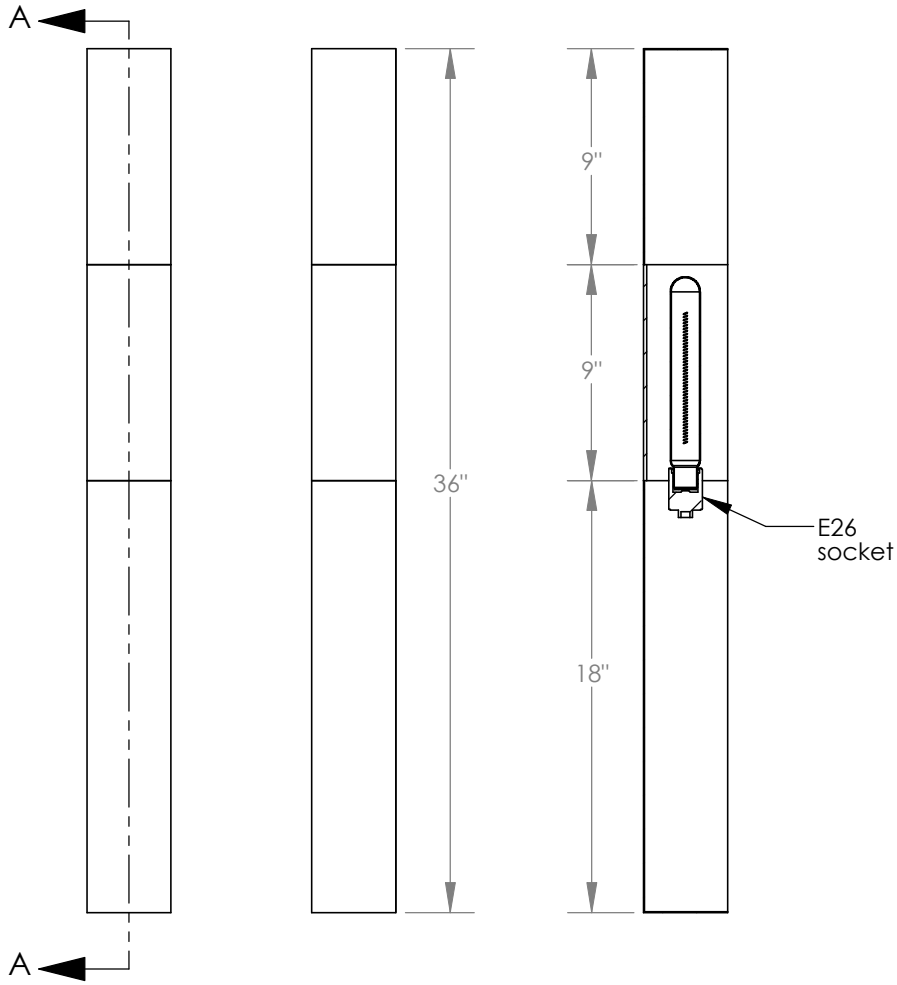

SECTION A-A

Top Brass C1707
Aug 24, 2020
kirk.laughton@topbrasslighting.com

copyright Top Brass 2020